台英智慧電網論壇
UK- Taiwan Smart Grid Forum

Yang, Jin-Shyr

Taiwan Power Company

2011/11/14

Taiwan Power Grid

- Installed capacity ≒40.91GW
  - Hydro (pump)
    - 2,602 MW
  - Thermal
    - 30,717 MW
  - Nuclear
    - 5,144 MW
  - Renewable
    - 2,451 MW

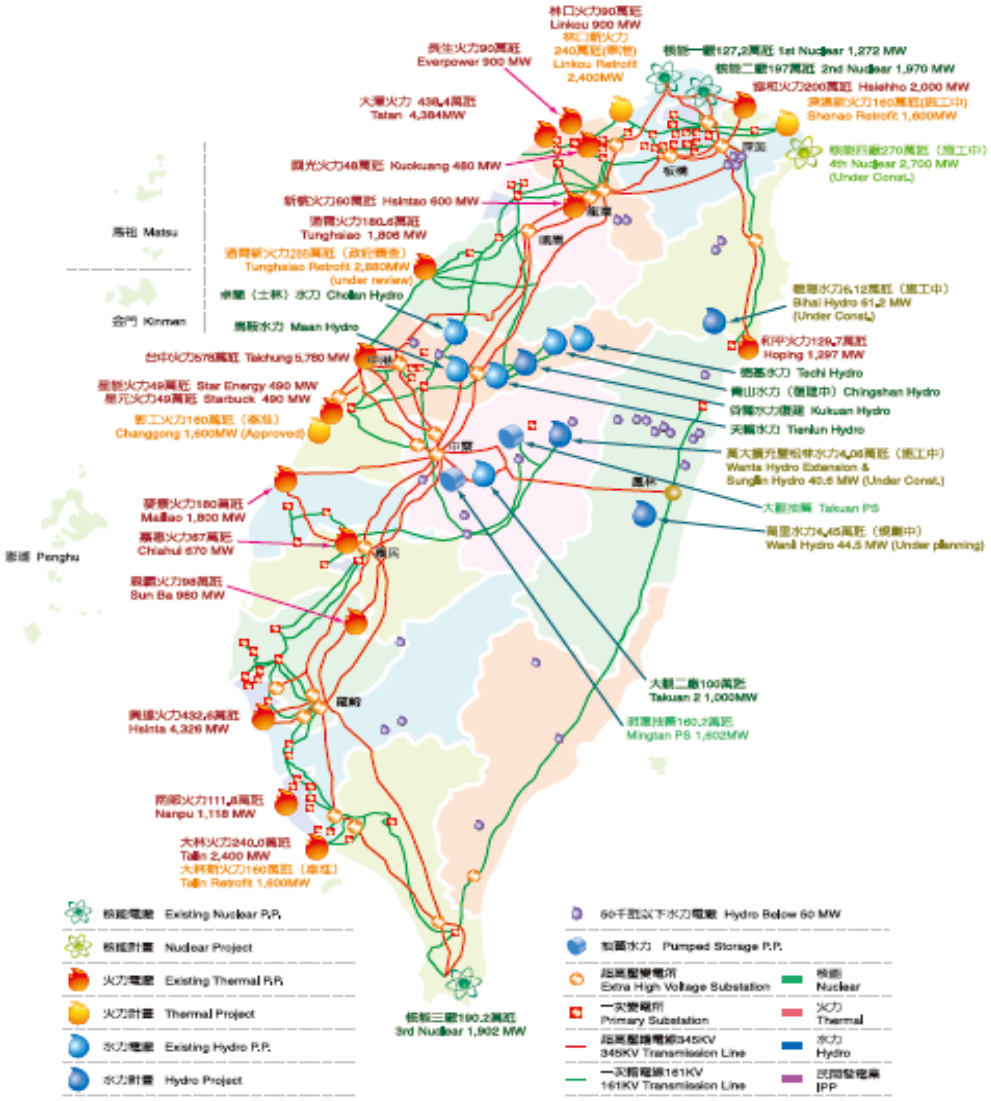

Taiwan's Master Plan on Energy Conservation and Emission Reduction

1. Energy Efficiency
   - ❖ Reduce energy intensity by 2% per annum and totally reduce 25% in 2015.
   - ❖ Further reduce energy intensity by 50% in 2025 with technological breakthrough and administrative measures.
2. Emission Reduction
   - ❖ Reduce CO_2 emission to 2005 level in 2020, and further reduce to 2000 level in 2025.
3. Low Carbon Energy
   - ❖ Increase share of low carbon energy in electricity system to 55% by 2025.

TPC’s Smart Grid Roadmap

- Taiwan power company (TPC) has planned a Smart Grid roadmap since 2007, the vision is to create a high quality, high efficiency, customer service oriented, and environment-friendly power grid.
- TPC will cooperate with National Science Council (NSC) , Taiwan Smart Grid Industry Association （TSGIA）and the national Smart Grid Master Plan to develop of the smart grid industry in Taiwan.
- In order to sustainable development, establish the business model of smart grid or AMI will be constructed to ensure stakeholders can get benefit.

Integrate the National Master Plan

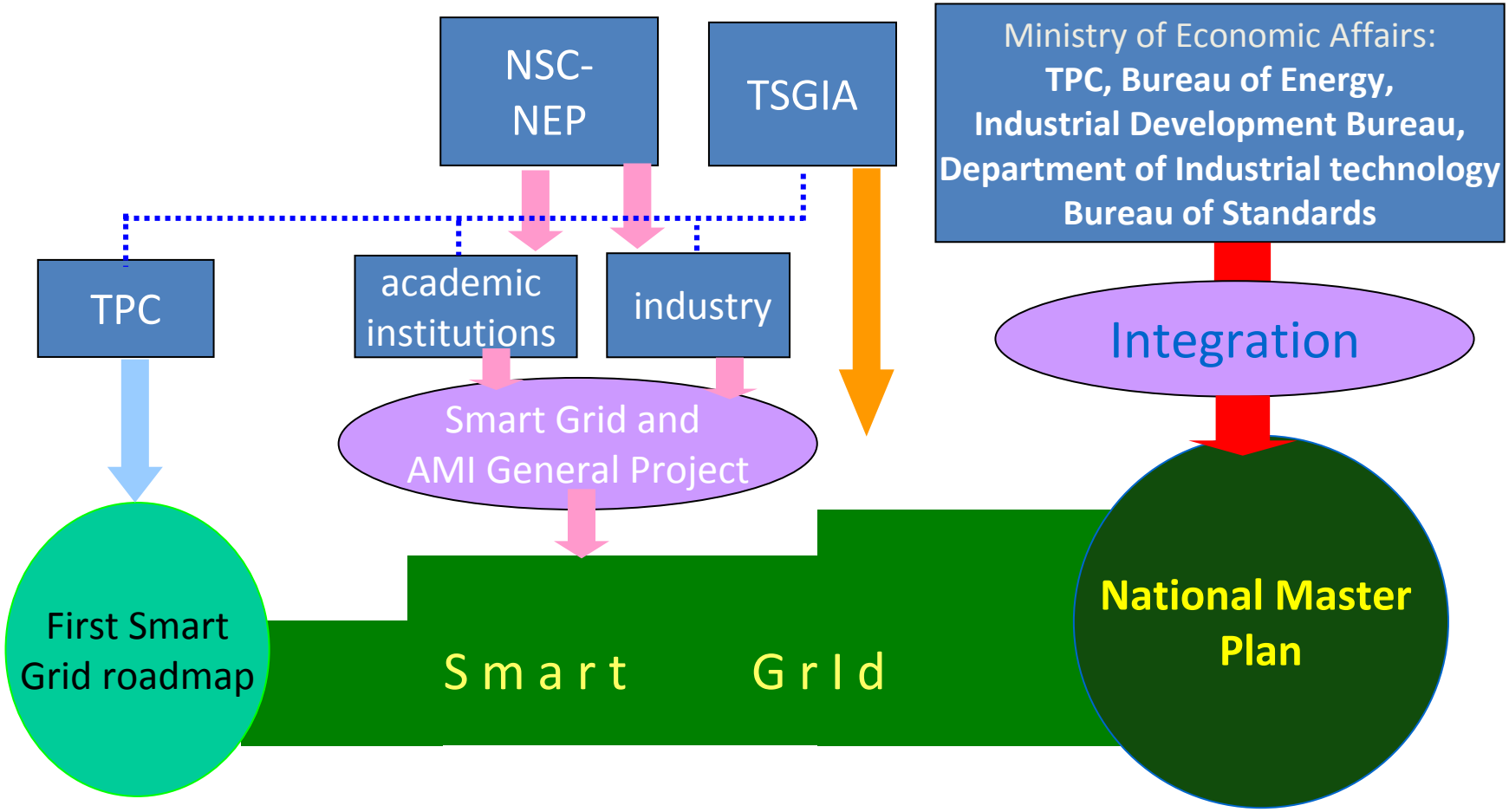

Implementation of strategies to promote renewable energy

- Depending on the implementation projects, continuing to set new PV demonstration system testing research, build a PV system analysis with database systems and development of monitoring technology.
- Development of renewable energy and hydrogen storage technology, and introduction of renewable energy technologies for energy storage performance evaluation.

Extension the Renewables Penetration and Improve its Effective Load Carrying Capability

- Renewables in Taiwan focus on **PV and Wind.**

	PV(MW)	Wind(MW)
By end of 2010	0.528	471.5
By end of 2025	2,000	3,000
By end of 2030	2,500	3,156

- Improve **Effective Load Carrying Capability(ELCC)** of **renewables**
  - Developed **Renewables Deployment Regions** (RDR) scheme to improve ELCC of renewable generations .
    - Divide Taiwan Grid to **10 RDRs**,
    - **Investigate** the **Potential** of renewables resources.
    - **Examine/Upgrade** Effective Load Carrying Capability (ELCC) based on Loss of Load Probability (LOLP) – Consideration includes Voltage control, Energy storage, Power quality and System Protection.
- The **Submarine Cable** leverages wind energy to increase the power capacity.

PVs Connect Distribution System in Southern Taiwan

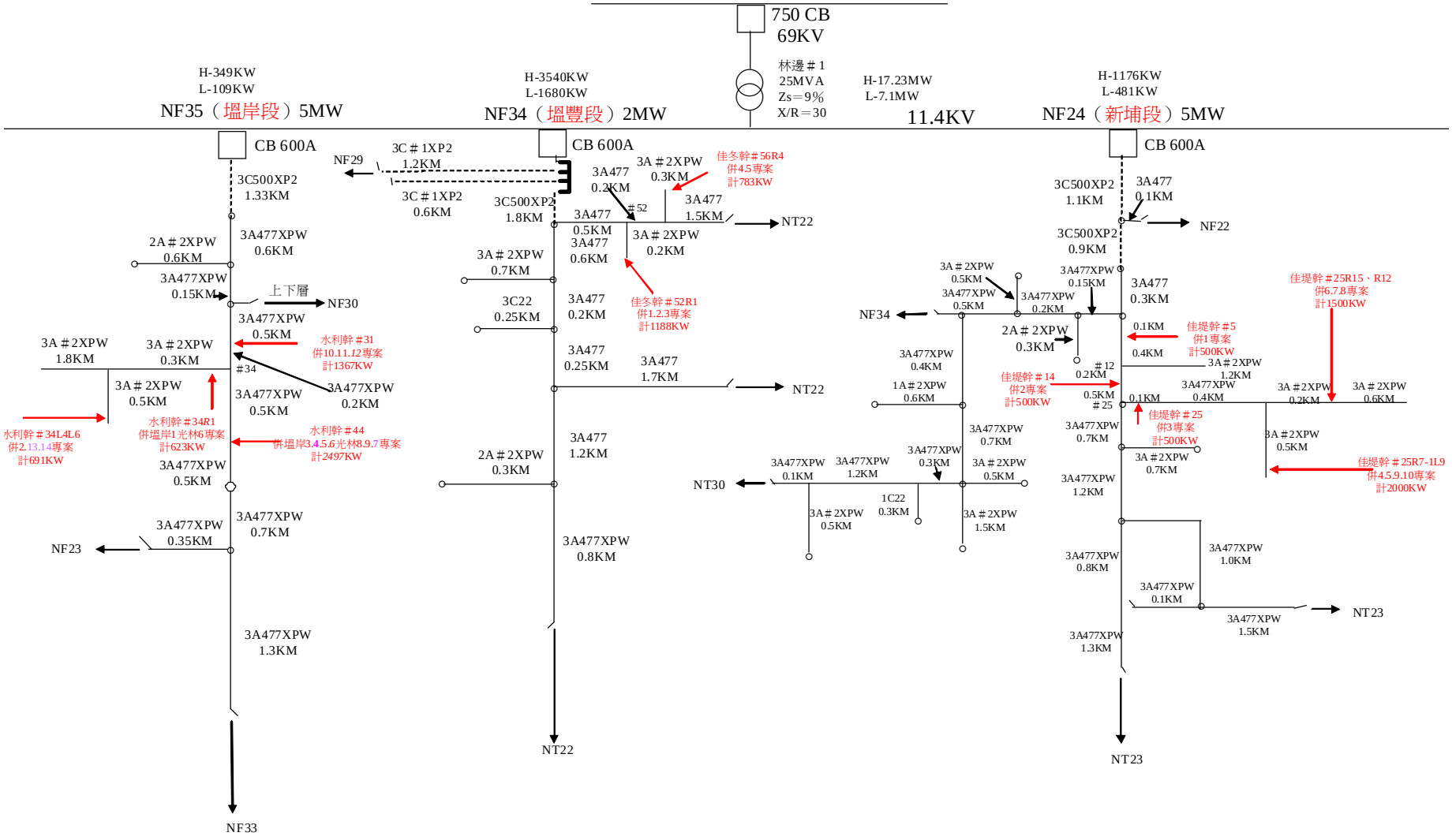

System Diagram of the Small Island

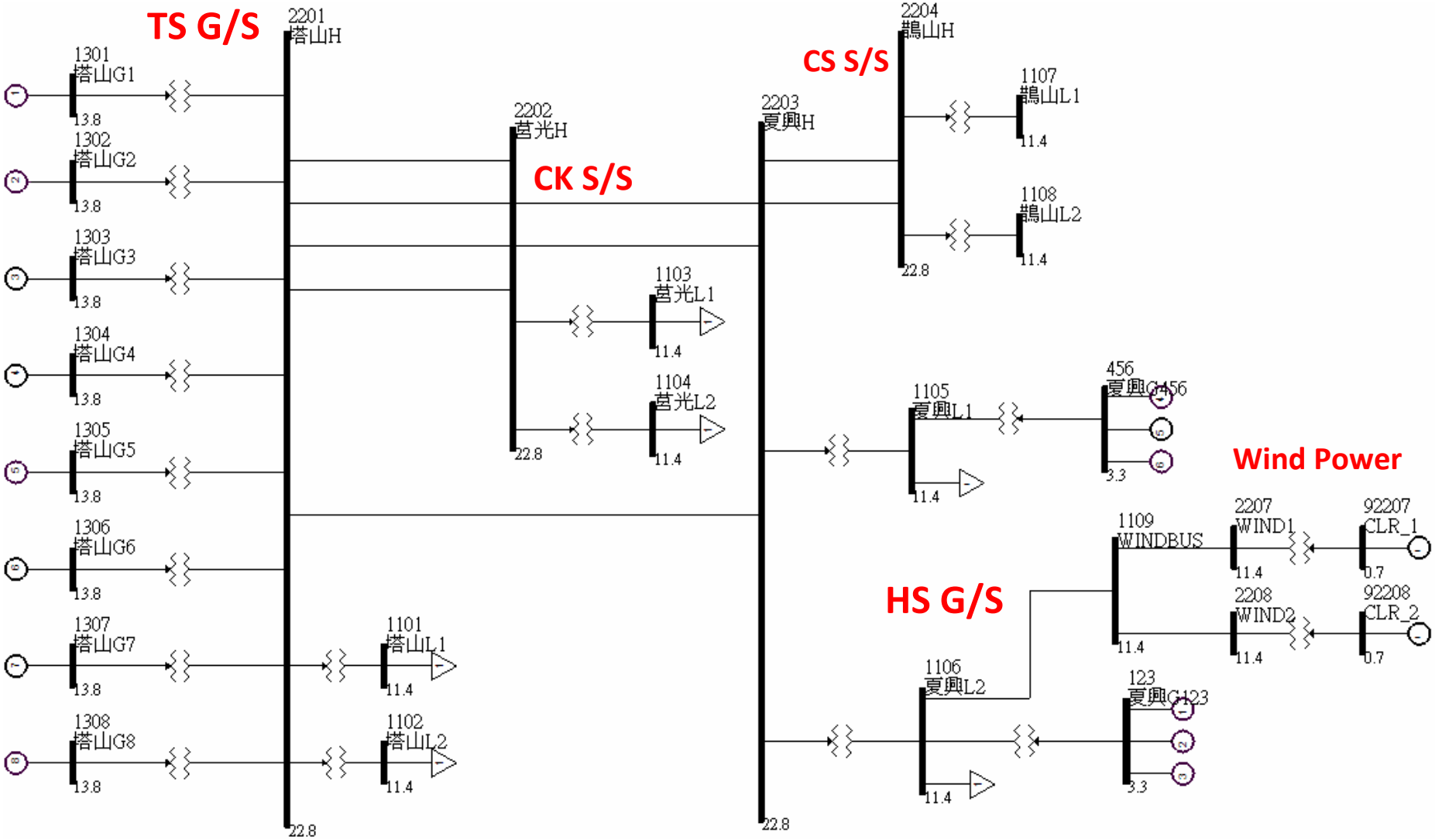

Transient Stability Simulation for Small Island Power System with Wind Power

- System load: 17MW, 3 DGs on, WG: 4MW, Battery: 2MW
- One Diesel generator trip, system transient as follows:

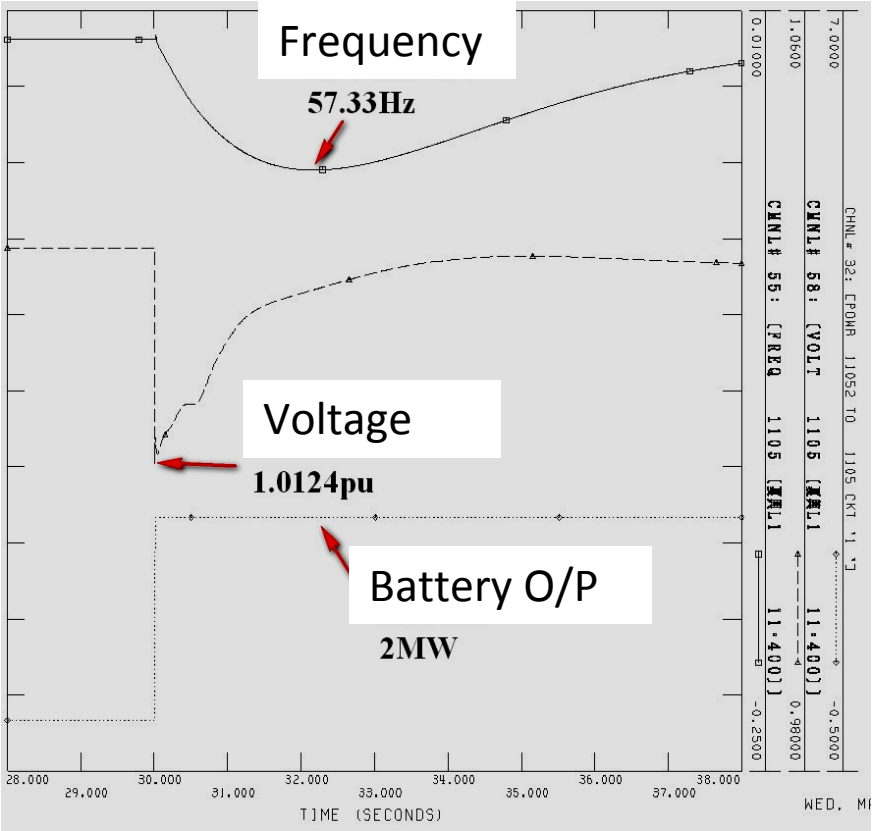

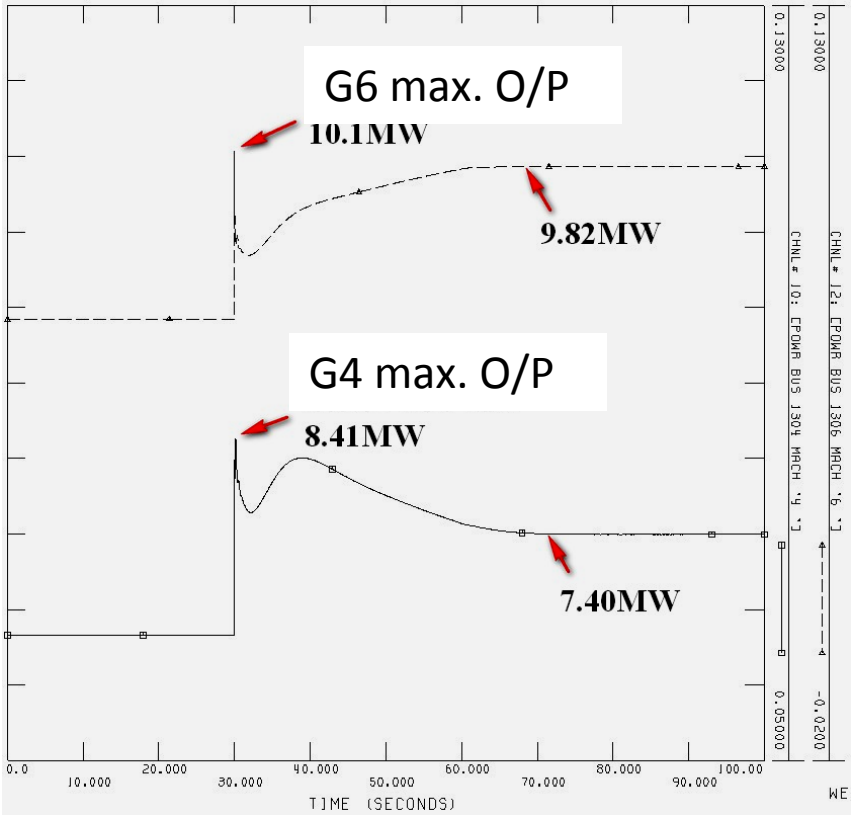

Summary

- Taiwan power company (TPC) has planned an integrated Smart Grid roadmap since 2007. It can upgrade Reliability , Power Quality and provides Customer Participation.
- The impacts of PV and wind power will significant to power grid and verify of various control schemes, TPRI build a microgrid and advanced distribution automation test site to evaluate the impacts of system contingency on the power grid with high penetration of renewables.
- Taiwan will work together with the world leading utility and organization to develop distributed renewable resource innovative technology.

Thanks for your attention